DIVISION OF PUBLIC WORKS BUREAU, ROBERT E. DAVIS, JR. BUREAU ENGINEER A.S.JR. DRAFTSMAN. DATE 11-77 SCALE NONE

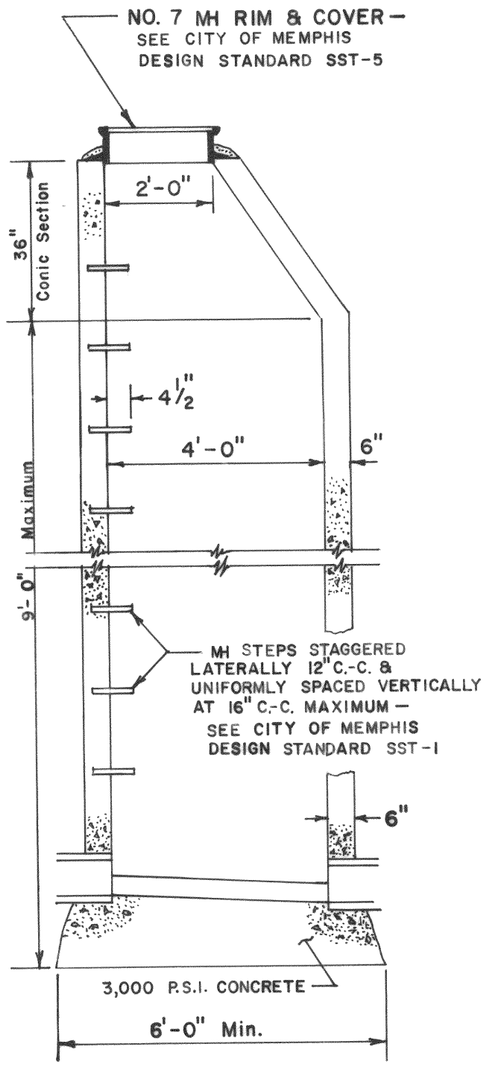

MANHOLE ELEVATION
12' MAXIMUM DEPTH

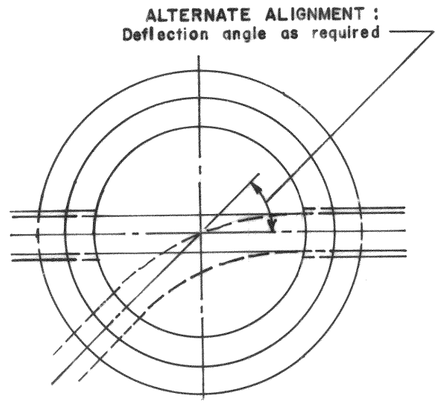

MANHOLE INVERT PLAN

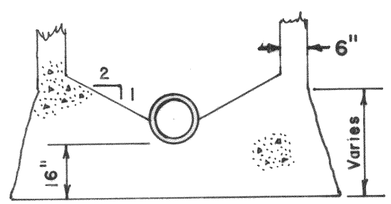

12' MAXIMUM DEPTH MH
BASE SECTION

NOTES:

IF MANHOLE CONSTRUCTION IS NOT CONTINUOUS POUR; A RUBBER WATER STOP GASKET WILL BE REQUIRED.

MH COATING NOTE:

OUTSIDE COATING OF MANHOLE SHALL BE WITH ASPHALTIC BLACK, AS AVAILABLE AT UNITED PAINT COMPANY.

METHOD OF APPLICATION SHALL BE PERFORMED BY BRUSH OR BY LOW PRESSURE SPRAYER.

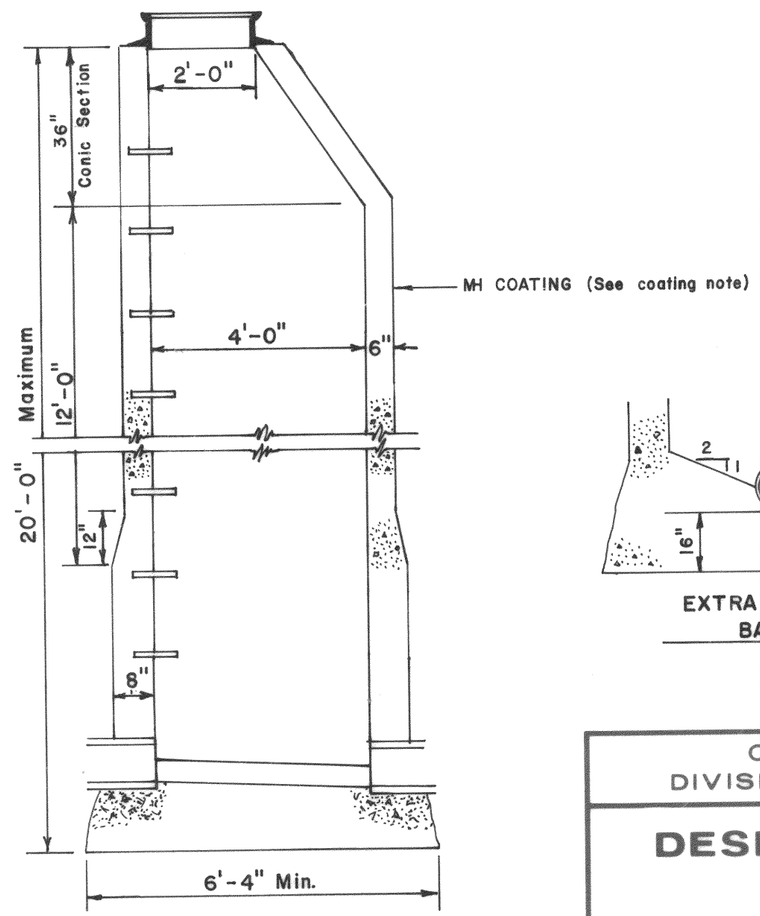

MANHOLE ELEVATION
EXTRA DEPTH

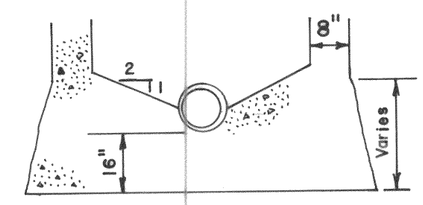

EXTRA DEPTH MH
BASE SECTION

REVISIONS			
NO.	DATE	BY	REMARKS

CONVERSIONS	
ENGLISH	METRIC

CITY OF MEMPHIS
DIVISION OF PUBLIC WORKS

DESIGN STANDARD

FOR

MONOLITHIC MANHOLE
POURED-IN-PLACE
FOR 8" THRU 18" DIAMETER SEWERS

MONOLIMH

Ray Mason — PRINCIPAL CIVIL ENG'R. — 1-23-80 DATE

DEPUTY DIR./CIVIL ENG'R. — DATE

R.E. Davis, Jr 12-7-77 DWG. NO. SST-6

10-5756