BUREAU, J.G. JAMES JR. ENGINEER F. READ DRAFTSMAN, d.b. DATE 7-15-77 SCALE N/T/S

REVISIONS			
NO.	DATE	BY	REMARKS
1	5/11/79	E.W.F.	STD. CONST PRACTICES
2	5-7-85	L.R.H.	REMOVED DIV. OF PUBLIC WORKS (T. BLK.)
3	7-16-87	D.H.G.	ADD: CLASS 'A'
4	2-9-88	D.H.G.	REMOVE DEPARTMENT (T. BLK.)
5	9-88	D.H.G.	ADD: DETAIL B JJC 9-12-88

CONVERSIONS	
ENGLISH	METRIC

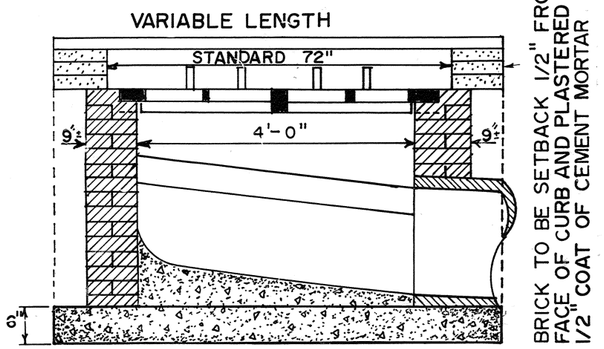

LONGITUDINAL SECTION

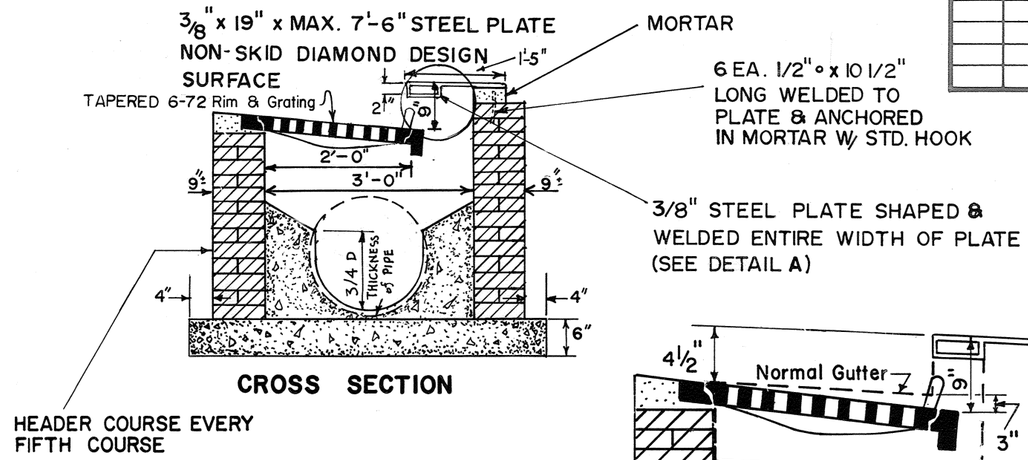

CROSS SECTION

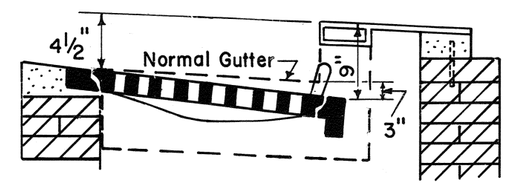

DETAIL B

OPENING AREA OF INLETS		
LENGTH OF CURB OPENING	AREA OF CURB OPENING	TOTAL OPENING AREA OF INLET
48"	2.33 SQ. FT.	6.12 SQ. FT.
54"	2.62 " "	6.41 " "
60"	2.91 " "	6.70 " "
66"	3.20 " "	6.99 " "
72"	3.50 " "	7.29 " "
OPENING AREA OF #12 GRATING 3.79 SQ. FT.		

NOTE: STANDARD CURB OPENING IS 72"
VARIATIONS ONLY ON ORDER OF ENGINEER
Conc. to be CLASS 'A'

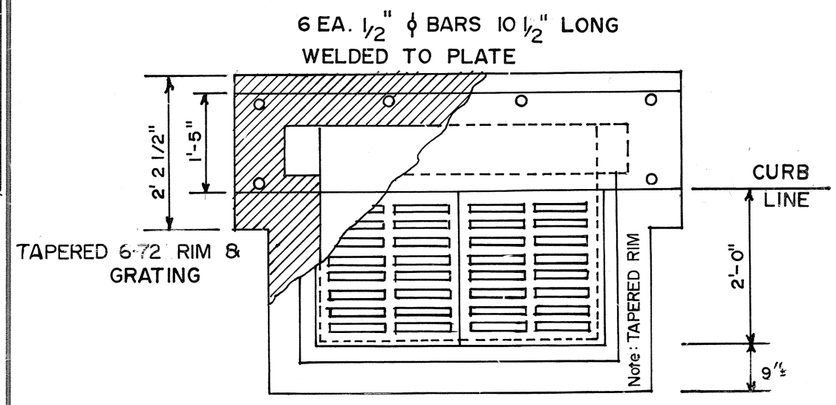

PLAN

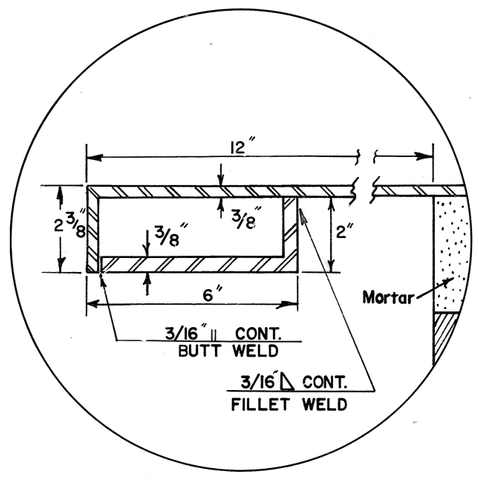

DETAIL A

CITY OF MEMPHIS
DIVISION OF ENGINEERING

DESIGN STANDARD
FOR
6-72 INLET

Ray Mason — PRINCIPAL CIVIL ENGINEER — 7-5-79 DATE

J. G. James Jr. — DEPUTY DIRECTOR/CIVIL ENGINEER — 7-10-79 DATE

DWG. NO. 21

JC-5756