BUREAU, _____ BUREAU ENGINEER, _____ DRAFTSMAN, _____ DATE, _____ SCALE _____

| REVISIONS | | | |
|---|---|---|---|
| NO. | DATE | BY | REMARKS |
| 1 | 5-30-85 | L.R.H. | REMOVED DIV. OF PUBLIC WORKS (T. BLK.) |
| 2 | 7-24-87 | D.H.G. | ADD: #4 ; CLASS 'A' |
| 3 | 2-10-88 | D.H.G. | REMOVED DEPARTMENT (T. BLK.) |

| CONVERSIONS | |
|---|---|
| ENGLISH | METRIC |

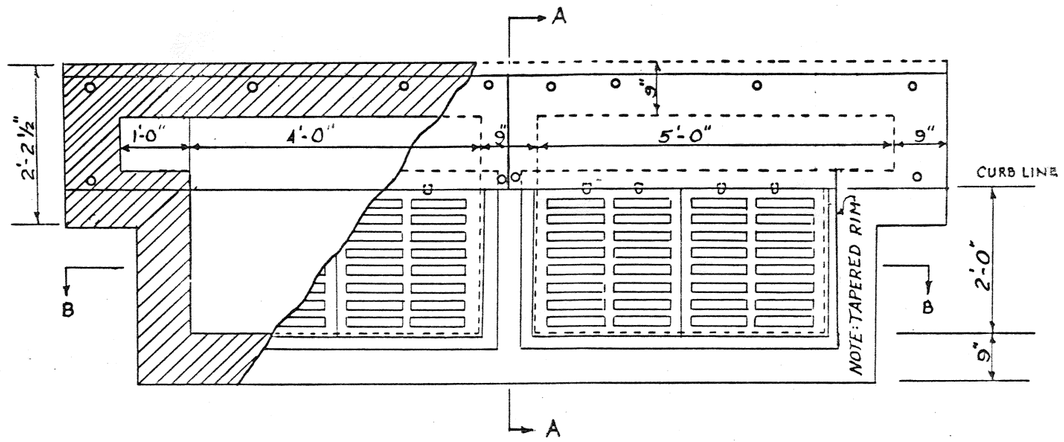


PLAN

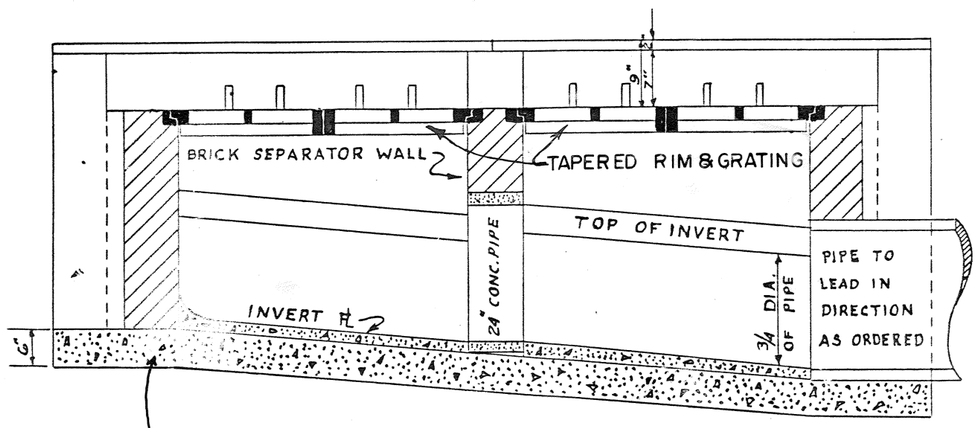


SECTION "B" "B"

CONCRETE TO BE CLASS 'A'

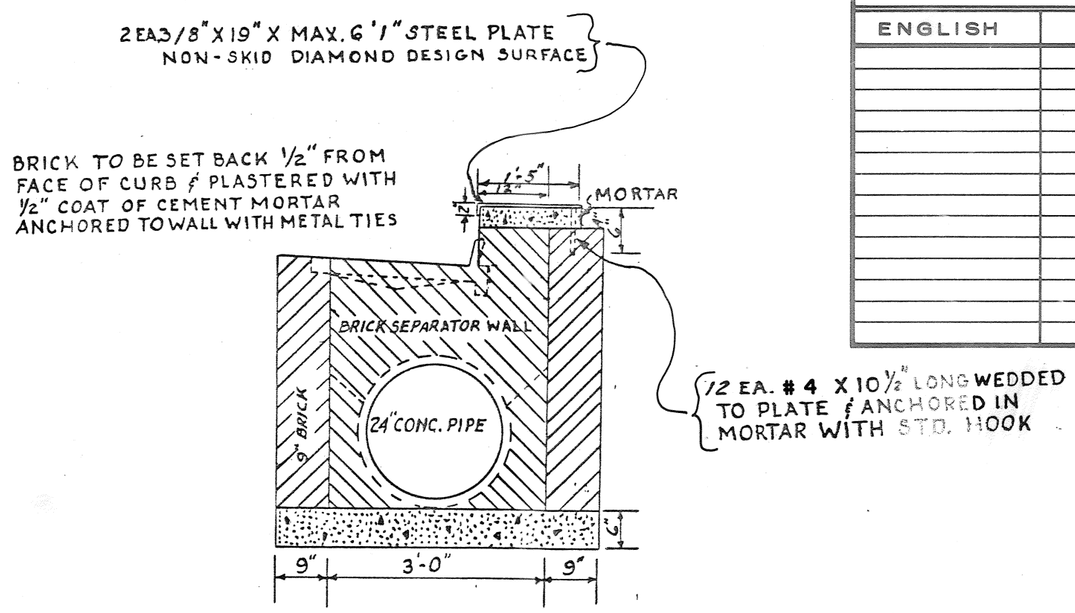


SECTION "A" "A"

DEPT. OF PUBLIC WORKS
STANDARD
TWIN 6-72 INLET
MEMPHIS, TENN.
DRAWN: R.L. RUTH DATE: 5-8-62 SCALE: 1/2" = 1'
CITY ENGINEER
OFFICE ENGINEER

CITY OF MEMPHIS
DIVISION OF ENGINEERING

# DESIGN STANDARD FOR TWIN 6-72 INLET

CITY ENGINEER _____ DATE _____

DWG. NO. 23

JC5756