BUREAU, J. G. JAMES JR. BUREAU ENGINEER F. READ DRAFTSMAN O.S. DATE 10-77 SCALE N/T/S

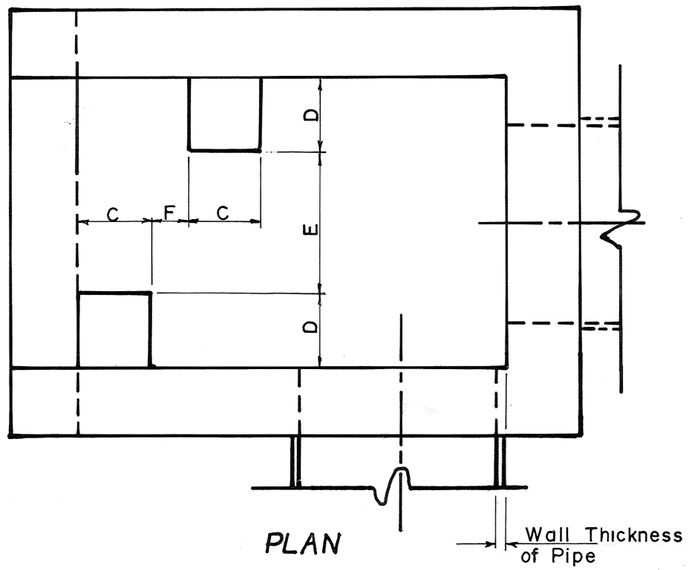

PLAN

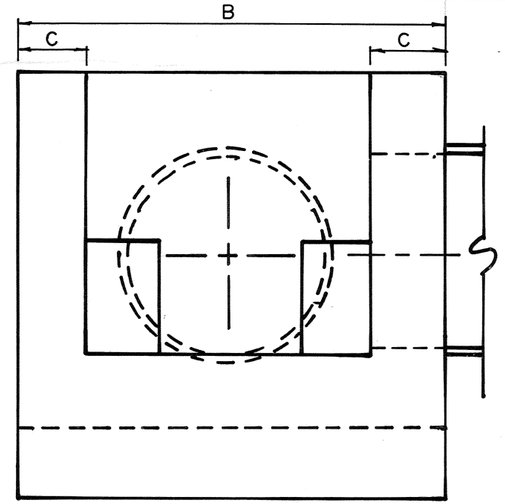

FRONT

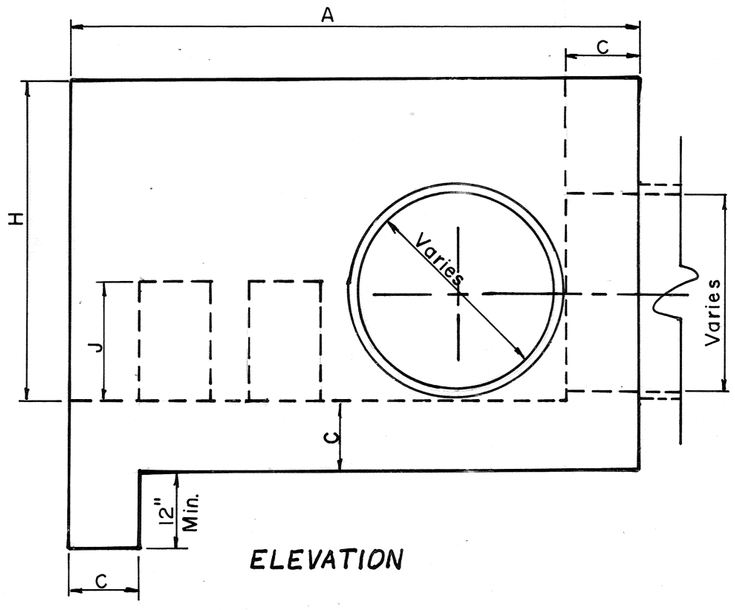

ELEVATION

DIMENSIONS									
Pipe Size	A	B	C	D	E	F	H	J	Cu. Yds Conc.
15"	3'-6"	3'-0"	6"	5"	1'-0"	3"	2'-0"	12"	0.56
18"	4'-0"	3'-0"	6"	6"	1'-0"	4"	2'-0"	12"	0.62
21"	4'-6"	3'-6"	6"	8"	1'-0"	5"	2'-6"	1'-6"	0.86
24"	5'-0"	3'-6"	6"	9"	1'-0"	6"	2'-6"	1'-6"	0.92
30"	6'-0"	4'-0"	9"	12"	1'-0"	7"	3'-0"	2'-0"	1.90
36"	7'-0"	4'-6"	9"	1'-4"	1'-0"	8"	3'-6"	2'-0"	2.52
42"	8'-0"	5'-0"	9"	1'-6"	1'-0"	9"	4'-0"	2'-6"	3.25
48"	9'-0"	5'-6"	9"	1'-9"	1'-0"	10"	4'-6"	3'-0"	4.08
54"	10'-0"	6'-0"	9"	2'-0"	1'-0"	11"	5'-0"	3'-6"	5.00
60"	11'-0"	6'-6"	9"	2'-3"	1'-0"	12"	5'-6"	3'-6"	5.94

NOTE: Concrete to be CLASS 'A'

REVISIONS

NO.	DATE	BY	REMARKS
1	5-30-85	L.R.H.	REMOVED DIV. OF PUBLIC WORKS (T. BLK.)
2	7-21-87	D.H.G.	ADD: CLASS 'A'
3	2-26-88	D.H.G.	REMOVED DEPARTMENT (T. BLK.)

CONVERSIONS

ENGLISH	METRIC

CITY OF MEMPHIS
DIVISION OF ENGINEERING

DESIGN STANDARD
FOR
SPECIAL HEADWALL AND SPILLWAY TYPE "C"

Ray Mason — PRINCIPAL CIVIL ENGINEER — DATE 7-5-79

J. G. James Jr. — DEPUTY DIRECTOR / CIVIL ENGINEER — DATE 7/5/79

DWG. NO. 27

JC-5756